MAXIMIZER

Gas Bake Ovens

General Features:

- Quality Construction
  for long life
- Stainless Steel Front
  Standard
- Large Capacity
  3,648 sq. inches of available cooking space on eight racks
- Unique Interior Design
  Better distribution of heat
- **Energy Efficient**
  New energy-saving "Power-Pak" burner system coupled with our unique baffle system for even heat and better baking
- Full Range Thermostat
  200°F - 550°F (93°C - 288°C)
- Versatile
  Removable racks increase oven capabilities
- Easily Serviceable
  All controls can be replaced from the front of the unit
- Power
  Gas - LP or NAT
- **Specific Features**
  of the 231B listed on the back

Warranty:

- **One year parts and labor**

Intertek Intertek

FLOOR MODEL C231B

Perfect for:

PRETZELS/BAGELS

Gas Bake/Roast Ovens can be combined with gas Pizza Ovens to meet your specific needs. Contact Peerless for details.

GAS FIRED

Wire Racks

MORE FOR LESS

More Cooking Space per Floor Space
More Cooking Capacity per Sales Dollar
More Performance per Gas Dollar

Peerless
Commercial and Industrial Ovens

P.O. Box 859 • Sandusky, Ohio 44870 • (419) 625-4514 • FAX 625-4597

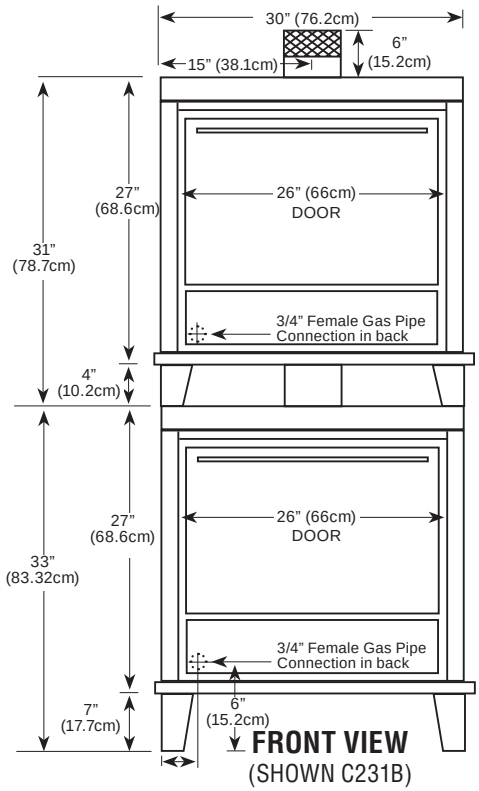

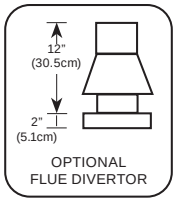

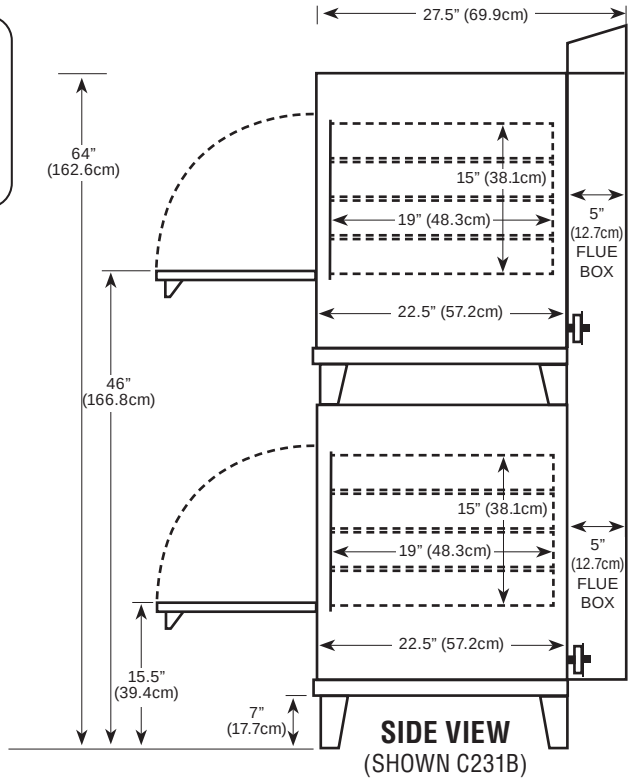

Counter space	**30" (76.2cm) wide x 27.5" (69.9cm) deep* x 64" (162.6cm) high**
Shelf size	**24" (61cm) wide x 19" (48.3cm) deep**
Shipping weight	**700 lbs (317.5kg)**
Shelves	**eight (8)**
Gas	**Maximum 60,000 BTU input**
Opening required for installation: 30"	* Handle adds 2.5"(6.4cm) to depth

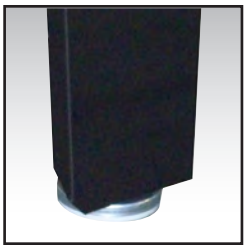

Adjustable Legs

Durable Construction

The C231B is built with ***prime 20-gauge cold-rolled sides*** and toped with a 16-gauge base. The ***interior is made of Armco Type 1, 20-gauge aluminized steel.*** Also, the C231B comes standard with a stainless steel front using high quality 20-gauge stainless steel. Each unit is equipped with a removable crumb tray for easy cleaning.

Energy Efficiency

The C231B is equipped with our ***new energy-saving "Power-Pak" burner system*** and our unique baffle system which make the oven highly efficient and helps eliminate hot spots. The ***heavily insulated walls*** coupled with our ***special vent system*** reduce heat loss yet keep the area safe for workers. The C231B is well-powered by 60,000 BTUs which enables it to have an ***extremely fast recovery rate.***

Versatility

The C231B comes with ***removable wire racks*** which increase the oven's capabilities for either ***baking, roasting, or pretzels*** (this feature comes with the gas oven only). This is a ***double stack*** for double the capacity, double the efficiency and double the profits.

Capacity

The C231B is the only ***double-door, eight-shelf*** bake oven available. Each C131B houses ***four (4), 5/8" (1.6 cm) shelves*** which offer 912 square inches (5883.8 sq cm) of cooking area per shelf. That equals ***1,824 total square inches (11,767.7 sq cm) per oven.*** Your total cooking area to 3,648 square inches (23,535.4 sq cm). When you compare the cost per shelf or per square inch to other two- or three-shelf ovens. Peerless is by far the greatest value.

Design Plus

The C231B has the controls in lower front for ease of operation, space savings and to keep them in their own air-conditioned area so they are not affected by outside influences. The C231B is totally thermocoupled and allows you to replace individual parts as opposed to throwing away the whole system.

Peerless
Commercial and Industrial Ovens

P.O. Box 859 • Sandusky, Ohio 44870 • (419) 625-4514 • FAX 625-4597